US006226231B1

(12) **United States Patent**
Kattan

(10) **Patent No.: US 6,226,231 B1**
(45) **Date of Patent: May 1, 2001**

(54) **TIME INTERVAL ANALYZER HAVING MULTIPLE MEASUREMENT CIRCUITS**

(75) Inventor: **Shalom Kattan**, Campbell, CA (US)

(73) Assignee: **Guide Technology, Inc.**, Sunnyvale, CA (US)

(*) Notice: Subject to any disclaimer, the term of this patent is extended or adjusted under 35 U.S.C. 154(b) by 0 days.

(21) Appl. No.: **09/354,346**

(22) Filed: **Jul. 14, 1999**

(51) **Int. Cl.**[7] **G04F 8/00**; G04F 10/00; H03B 3/46

(52) **U.S. Cl.** **368/113**; 370/516; 375/371

(58) **Field of Search** 368/113, 121; 370/516; 375/224, 226, 228, 371

(56) **References Cited**

U.S. PATENT DOCUMENTS

4,757,452		7/1988	Scott et al. .	
4,916,411		4/1990	Lymer .	
5,566,180	*	10/1996	Eidson et al.	379/94.2
5,613,496	*	3/1997	Arand et al.	728/702
5,883,924		3/1999	Siu et al. .	

OTHER PUBLICATIONS

"A High–Precision Time–to–Digital Converter for Pulsed Time–of–Flight Laser Radar Applications", pp. 521–536, Määttä and Kostamovaara, *IEEE Transactions on Instrumentation and Measurement,* vol. 47, No. 2, Apr., 1998.

"Universal Counter Resolves Picoseconds in Time Interval Measurements", pp. 2–11, and "Time Synthesizer Generates Precise Pulse Widths and Time Delays for Critical Timing Application", pp. 12–19, *Hewlett Packard Journal* Aug., 1978, Palo Alto, CA.

Hewlett–Packard Application Note 358–2—"HP 5371A Frequency and Time Interval Analyzer, Jitter and Wander Analysis in Digital Communications", pp. 1–20, Jun., 1988, Palo Alto, CA.

Hewlett–Packard Application Note 200, Electronic Counter Series—"Fundamentals of the Electronic Counters", 1997, Palo Alto, CA.

"Technical Resources", http://wavecrestcorp.com/Technical/Jitter.html, 1998–1999.

"A Continuous Time Stamping Time Digitizer Architecture for High Energy Physics Applications", Gorbics, et al., Chestnut Ridge, NY, Oct., 1996, 5 pages.

"The Time Marker Data Acquisition System for Belle an Example of the LeCroy–Laboratory Collaboration Program", Blanar and Sumner, Chestnut Ridge, NY, Oct., 1996, 6 pages.

"A High Resolution Multihit Time–to–Digital Converter Integrated Circuit", Gorbics, et al., Chestnut Ridge, NY, Nov., 1996, 7 pages.

"LeCroy MQT300 Charge–to–Time Converter", Yamrone, et al., Chestnut Ridge, NY, Nov., 1996, 3 pgs.

"A 9U VME 96–Channel Time–to–Digital Converter Module", Uhmeyer, et al., Chestnut Ridge, NY, Oct., 1996, 6 pages.

"New Techniques for Measuring Time Intervals with Very High Resolution", Sumner and Blanar, Aug. 1996, 7 pages.

Wavecrest Corporation DTS 2070/2075 Time Measuring Device Block Diagram.

* cited by examiner

Primary Examiner—Vit Miska
(74) *Attorney, Agent, or Firm*—Dority & Manning, P.A.

(57) **ABSTRACT**

A time interval analyzer includes a signal channel that receives an input signal. A plurality of measurement circuits are defined within the signal channel in parallel with each other. Each measurement circuit is configured to receive the input signal, measure an occurrence of a first event of the input signal with respect to a predetermined time reference and to output a time signal corresponding to the measurement of the occurrence. A processor circuit is in communication with the signal channel. It is configured to receive and compare time signals from the measurement circuits to each other to determine a time interval between the first event measured by a first measurement circuit and an event measured by a second measurement circuit.

20 Claims, 8 Drawing Sheets

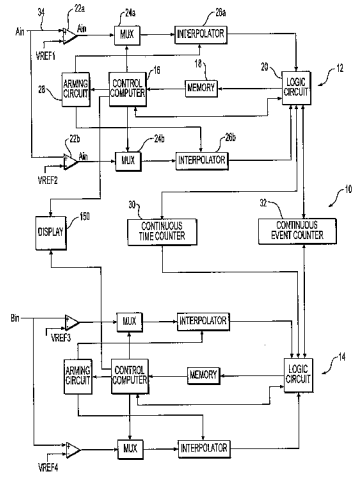

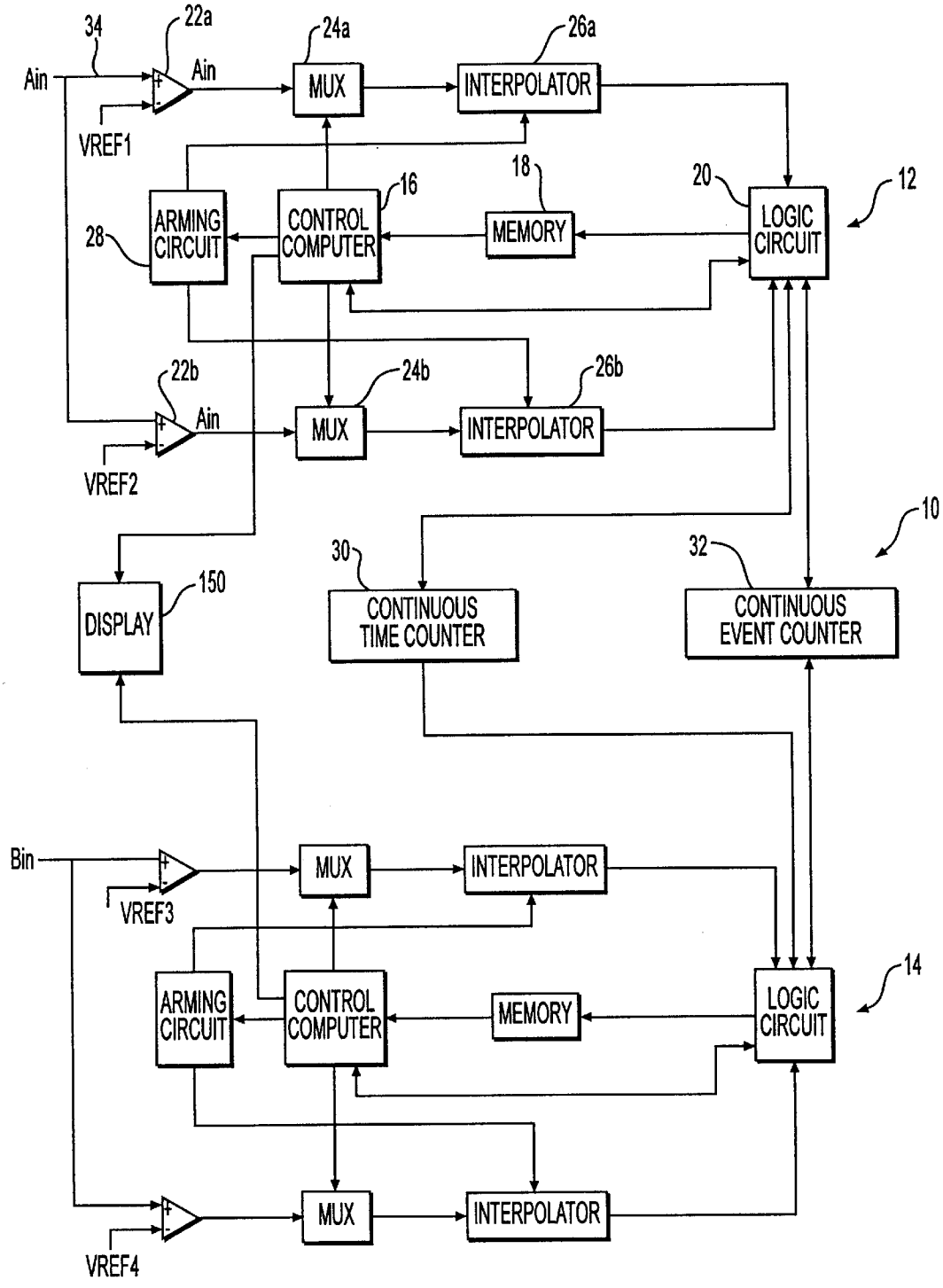
34
22a
24a
26a
Ain
Ain
MUX
INTERPOLATOR
VREF1
18
20
12
16
ARMING CIRCUIT
CONTROL COMPUTER
MEMORY
LOGIC CIRCUIT
28
22b
24b
26b
Ain
MUX
INTERPOLATOR
VREF2
10
30
32
150
DISPLAY
CONTINUOUS TIME COUNTER
CONTINUOUS EVENT COUNTER
Bin
MUX
INTERPOLATOR
VREF3
14
ARMING CIRCUIT
CONTROL COMPUTER
MEMORY
LOGIC CIRCUIT
MUX
INTERPOLATOR
VREF4

FIG. 1

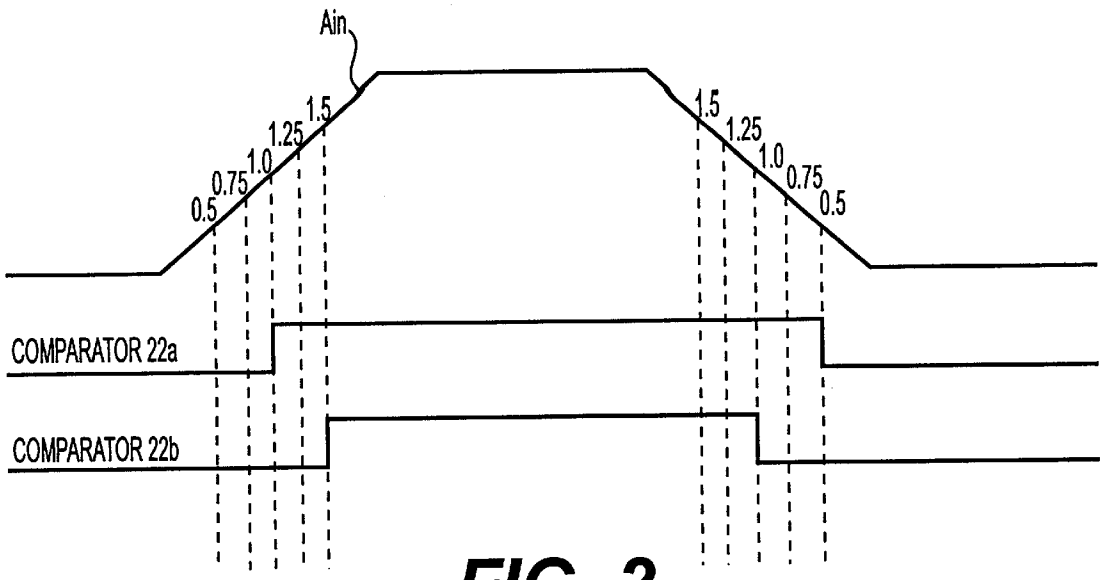

FIG. 2

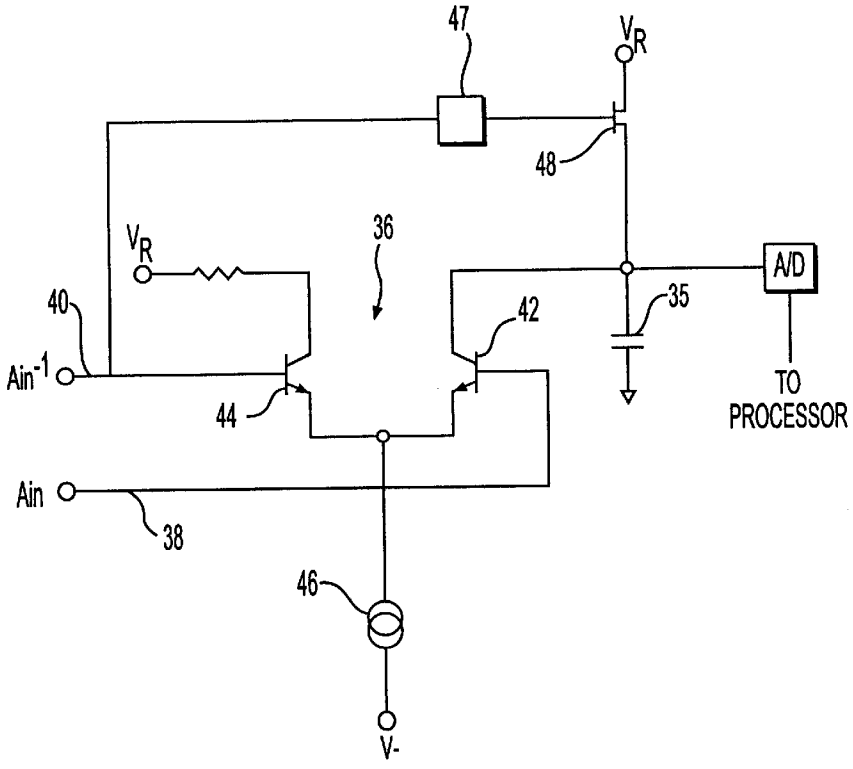

FIG. 3
PRIOR ART

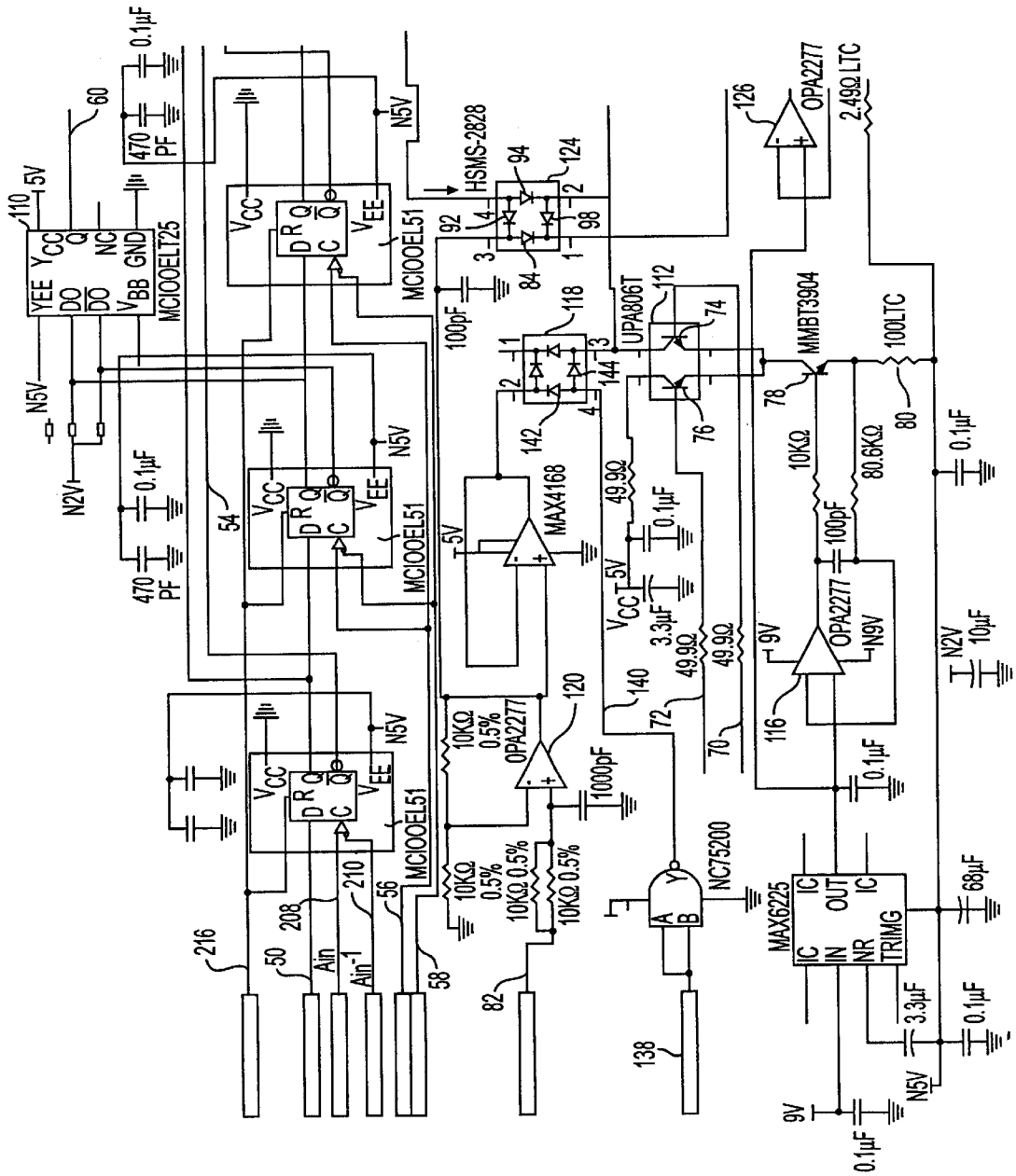
MCIOOELT25
MCIOOEL51
HSMS-2828
UPA806T
MMBT3904
MAX4168
OPA2277
NC7S200
MAX6225
100LTC
2.49Ω LTC
10KΩ
80.6KΩ
49.9Ω
100pF
1000pF
0.1µF
3.3µF
10µF
68µF
470 PF
5V
N5V
N2V
9V
N9V
Ain
Ain-1

FIG. 4A

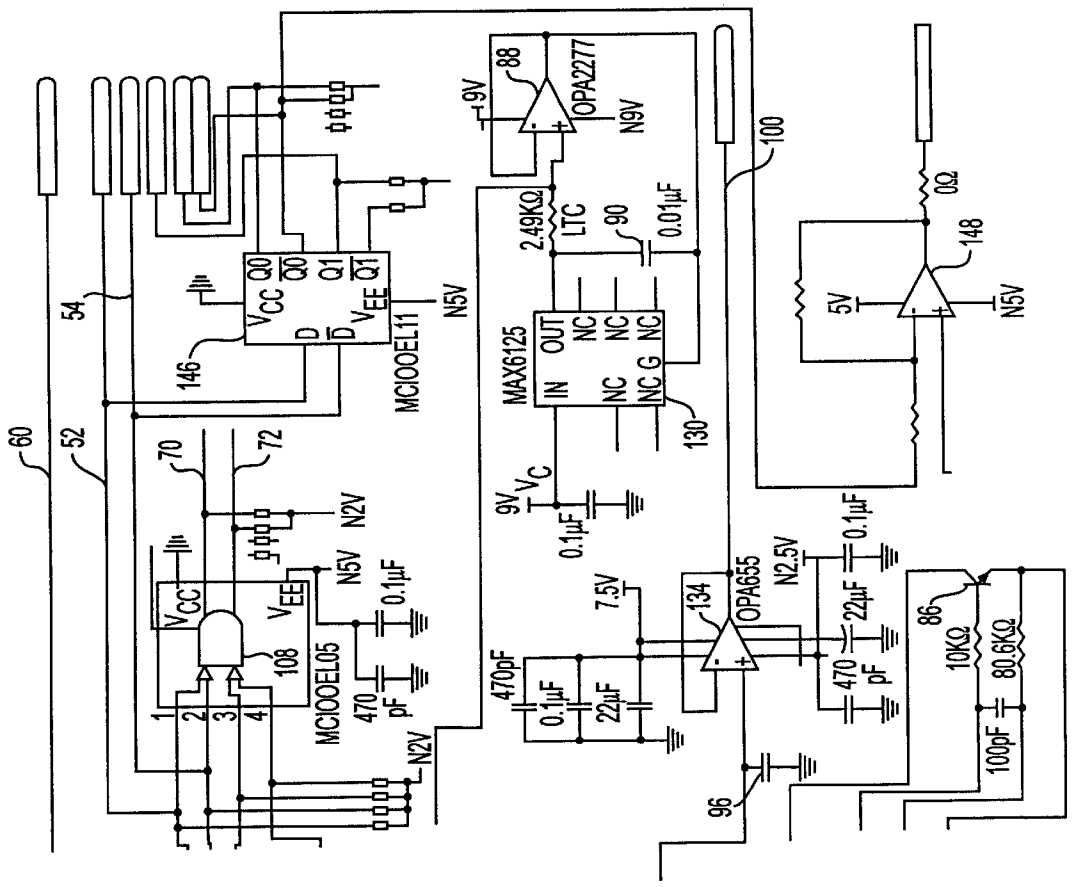
60
52
54
70
72
146
MCIOOEL11
MCIOOEL05
108
N2V
N5V
0.1µF
470 pF
88
OPA2277
9V
N9V
2.49KΩ
LTC
90
0.01µF
MAX6125
IN
OUT
NC
NC G
130
9V
VC
0.1µF
100
148
5V
0Ω
134
OPA655
7.5V
470pF
0.1µF
22µF
N2.5V
22µF
0.1µF
470 pF
86
10KΩ
80.6KΩ
100pF
96

FIG. 4B

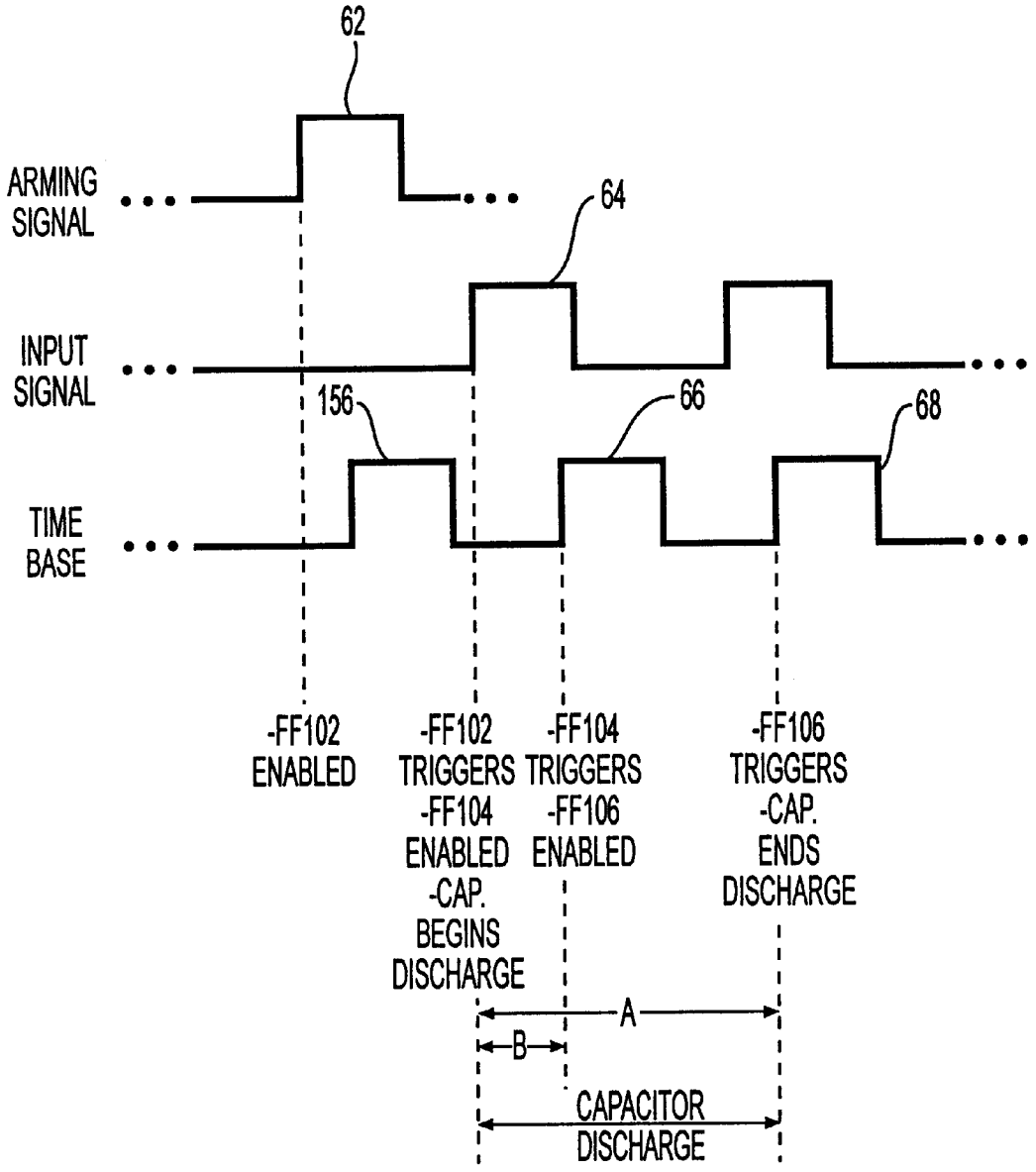
62
ARMING SIGNAL
64
INPUT SIGNAL
156
66
68
TIME BASE
-FF102 ENABLED
-FF102 TRIGGERS -FF104 ENABLED -CAP. BEGINS DISCHARGE
-FF104 TRIGGERS -FF106 ENABLED
-FF106 TRIGGERS -CAP. ENDS DISCHARGE
A
B
CAPACITOR DISCHARGE

FIG. 5

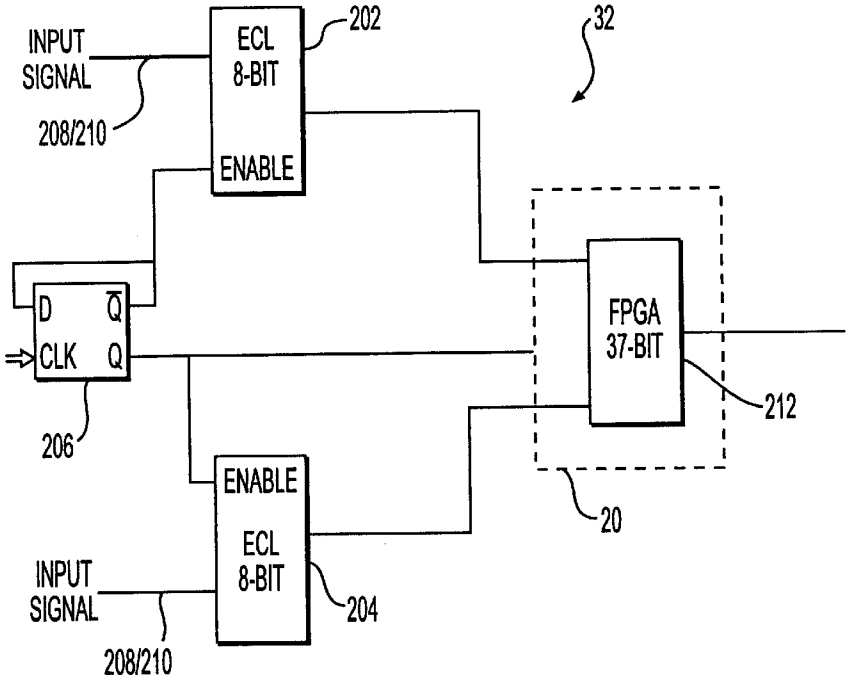
INPUT SIGNAL
208/210
ECL 8-BIT
202
ENABLE
32
D
Q
CLK
Q
206
FPGA 37-BIT
212
20
ENABLE
ECL 8-BIT
204
INPUT SIGNAL
208/210

FIG. 6

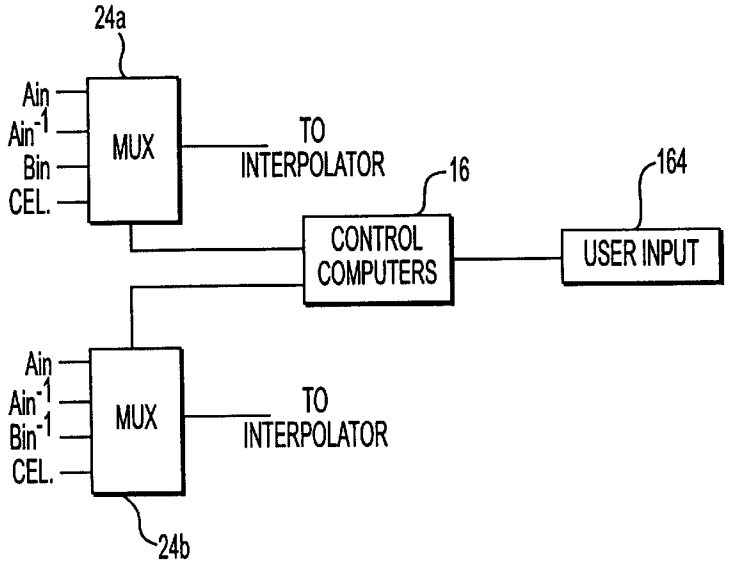
24a
Ain
Ain-1
Bin
CEL.
MUX
TO INTERPOLATOR
16
CONTROL COMPUTERS
164
USER INPUT
Ain
Ain-1
Bin-1
CEL.
MUX
TO INTERPOLATOR
24b

FIG. 7

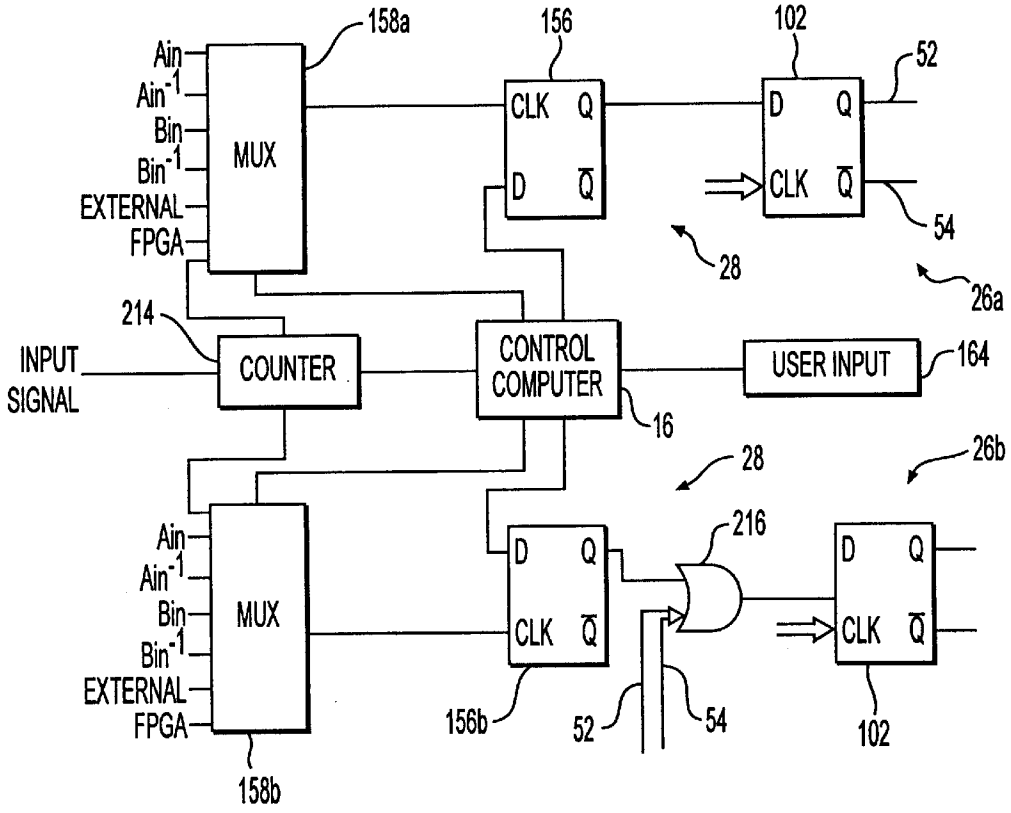
158a
156
102
52
Ain
Ain-1
Bin
Bin-1
EXTERNAL
FPGA
MUX
CLK Q
D Q
CLK Q
54
28
26a
214
INPUT SIGNAL
COUNTER
CONTROL COMPUTER
USER INPUT
164
16
28
26b
216
MUX
158b
156b
52
54
102

FIG. 8

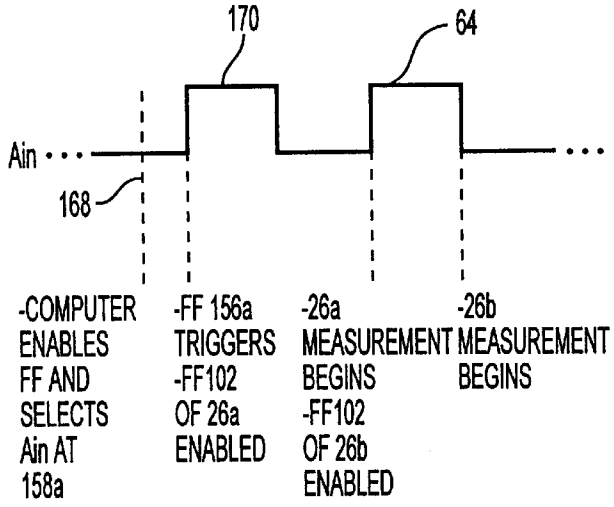
170
64
Ain
168
-COMPUTER ENABLES FF AND SELECTS Ain AT 158a
-FF 156a TRIGGERS -FF102 OF 26a ENABLED
-26a MEASUREMENT BEGINS -FF102 OF 26b ENABLED
-26b MEASUREMENT BEGINS

FIG. 9

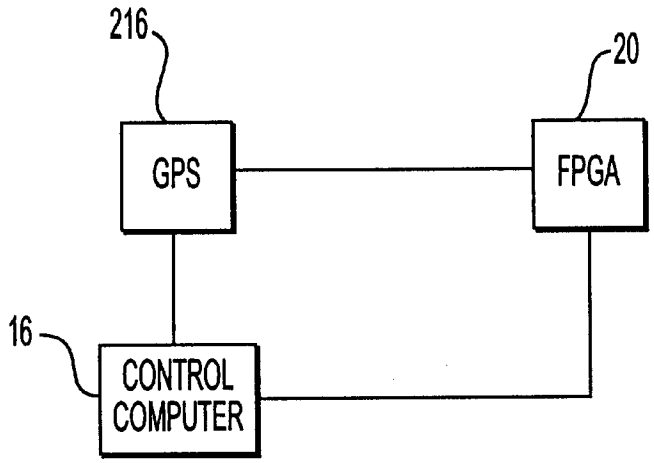

FIG. 10

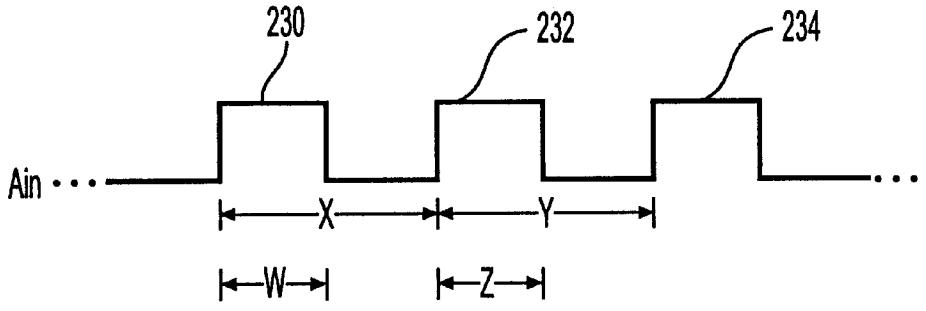

FIG. 11

TIME INTERVAL ANALYZER HAVING MULTIPLE MEASUREMENT CIRCUITS

BACKGROUND OF THE INVENTION

In general, an integrated circuit refers to an electrical circuit contained on a single monolithic chip containing active and passive circuit elements. As should be well understood in this art, integrated circuits are fabricated by diffusing and depositing successive layers of various materials in a preselected pattern on a substrate. The materials can include semiconductive materials such as silicon, conductive materials such as metals, and low dielectric materials such as silicon dioxide. The semiconductive materials contained in integrated circuit chips are used to form almost all of the ordinary electronic circuit elements, such as resistors, capacitors, diodes, and transistors.

Integrated circuits are used in great quantities in electronic devices such as digital computers because of their small size, low power consumption and high reliability. The complexity of integrated circuits range from simple logic gates and memory units to large arrays capable of complete video, audio and print data processing. Presently, however, there is a demand for integrated circuit chips to accomplish more tasks in a smaller space while having even lower operating voltage requirements.

Currently, the semiconductor industry is focusing its efforts on reducing dimensions within each individual integrated circuit in order to increase speed and to reduce energy requirements. The demand for faster and more efficient circuits, however, has created various problems for circuit manufacturers. For instance, a unique problem has emerged in developing equipment capable of testing, evaluating and developing faster chips. Timing errors and pulse deviations may constitute a greater portion of a signal period at higher speeds. As such, a need exists not only for devices capable of detecting these errors but also devices capable of characterizing and identifying the errors.

In the past, electronic measurement devices have been used to test integrated circuits for irregularities by making frequency and period measurements of a signal output from the circuit. Certain devices, known as time interval analyzers, can perform interval measurements, i.e. measurements of the time period between two input signal events, and can totalize a specific group of events. A time interval analyzer generally includes a continuous time counter and a continuous event counter. Typically, the device includes a measurement circuit on each of a plurality of measurement channels. Each channel receives an input signal. By directing a signal across the channels to a given measurement circuit so that the circuit receives two input signals, the circuit is able to measure the time interval between two events in the signals. Such devices are capable of making millions of measurements per second.

Measurement devices based exclusively on counters, however, are unable to directly measure time intervals. In very general terms, a counter refers to an electronic device that counts events, for example pulses, on an input signal. The measurement device also typically includes a frequency standard or clock to measure the time period during which the counter is activated. Thus, the measurement device measures the number of input signal events that occur over a known time period and, therefore, measures the frequency of the events. In other words, clocks contained in counters generate a signal at a known frequency which is then used to measure the frequency of other signals.

By measuring certain characteristics of a signal emitted by an integrated circuit, time interval analyzers and counter-based measurement devices can be used to detect timing errors that may be present within the circuit. This information can then be used to assist in developing an integrated circuit or for detecting defects in mass-produced circuits.

Timing errors on integrated circuit signals are generally referred to as "jitter." Jitter, broadly defined as a deviation between a real pulse and an ideal pulse, can be a deviation in amplitude, phase, and/or pulse width. Jitter typically refers to small, high frequency waveform variations caused by mechanical vibrations, supply voltage fluctuations, control-system instability and the like.

Instruments such as time interval analyzers, counter-based measurement devices and oscilloscopes have been used to measure jitter. In particular, time interval analyzers can monitor frequency changes and frequency deviation over time. In this manner, they not only detect jitter, but can also characterize jitter so that its source can be determined. Generally, however, conventional devices, including time interval analyzers, are too slow to provide reliable measurements at the speed and frequency of high-speed integrated circuits.

SUMMARY OF THE INVENTION

The present invention recognizes and addresses the foregoing considerations, and others, of prior art constructions and methods.

Some of these objects are achieved by a time interval analyzer for measuring time intervals between signal events. The analyzer includes a signal channel that receives an input signal. A plurality of measurement circuits are defined within the signal channel in parallel with each other. Each measurement circuit is configured to receive the input signal, measure an occurrence of a first event of the input signal with respect to a predetermined time reference and to output a time signal corresponding to the measurement of the occurrence. A processor circuit is in communication with the signal channel. The processor circuit is configured to receive and compare the time signals from the measurement circuits to each other to determine a time interval between the first event measured by a first measurement circuit and an event measured by a second measurement circuit.

The accompanying drawings, which are incorporated in and constitute a part of this specification, illustrate one or more embodiments of the invention and, together with the description, serve to explain the principles of the invention.

BRIEF DESCRIPTION OF THE DRAWINGS

A full and enabling disclosure of the present invention, including the best mode thereof, directed to one of ordinary skill in the art, is set forth in the specification, which makes reference to the appended drawings, in which;

FIG. **1** is a block-diagram illustration of a time interval analyzer in accordance with a preferred embodiment of the present invention;

FIG. **2** is a graphical illustration of the operation of a time interval analyzer in accordance with a preferred embodiment of the present invention;

FIG. **3** is an electrical schematic illustration of a prior art time interval analyzer;

FIGS. **4**A and **4**B are an electrical schematic illustration of an interpolator for use in a time interval analyzer in accordance with a preferred embodiment of the present invention;

FIG. **5** is a graphical illustration of the operation of a time interval analyzer in accordance with a preferred embodiment of the present invention;

FIG. **6** is a block diagram illustration of a time interval analyzer in accordance with a preferred embodiment of the present invention;

FIG. **7** is a block diagram illustration of a time interval analyzer in accordance with a preferred embodiment of the present invention;

FIG. **8** is a block diagram illustration of a time interval analyzer in accordance with a preferred embodiment of the present invention;

FIG. **9** is a graphical illustration of the operation of a time interval analyzer in accordance with a preferred embodiment of the present invention;

FIG. **10** is a block-diagram illustration of a time interval analyzer in accordance with a preferred embodiment of the present invention in association with a global positioning system; and

FIG. **11** is a graphical illustration of the operation of a time interval analyzer in accordance with a preferred embodiment of the present invention.

Repeat use of reference characters in the present specification and drawings is intended to represent same or analogous features or elements of the invention.

DETAILED DESCRIPTION OF PREFERRED EMBODIMENTS

Reference will now be made in detail to presently preferred embodiments of the invention, one or more examples of which are illustrated in the accompanying drawings. Each example is provided by way of explanation of the invention, not limitation of the invention. In fact, it will be apparent to those skilled in the art that modifications and variations can be made in the present invention without departing from the scope and spirit thereof. For instance, features illustrated or described as part of one embodiment may be used on another embodiment to yield a still further embodiment. Thus, it is intended that the present invention covers such modifications and variations as come within the scope of the appended claims and their equivalents.

The Time Interval Analyzer

Referring to FIG. **1**, a time interval analyzer **10** includes two channels indicated at **12** and **14**. Each channel includes a control computer **16**, for example a 200 MHz DSP processor, with associated memory **18**, for example a high-performance FIFO memory, and a logic a circuit **20**. Alternatively, the channels may share a common computer, memory and logic circuit, which may be collectively referred to as a processor circuit. Each channel, in turn, includes parallel measurement circuits having comparators **22***a* and **22***b*, multiplexers **24***a* and **24***b* and interpolators **26***a* and **26***b*. That is, each channel includes multiple, in this case two, measurement circuits. An arming circuit **28** is controlled by computer **16** to trigger the interpolators. A continuous time counter **30** and continuous event counter **32** provide time and event counts to both channels **12** and **14**. Alternatively, each measurement circuit may have its own time counter and event counter, provided that the respective counters for each measurement circuit are synchronized.

Channels **12** and **14** are mirror images of each other. Thus, while the following discussion is directed primarily to channel **12**, it should be understood that the construction of channel **14** is the same.

As indicated in the Background section above, the present invention is directed to a time interval analyzer for measuring one or more desired characteristics of an input signal. Preferably, the device is configured to measure signals having frequencies up to approximately 1 GHz. Thus, preferred embodiments employ ECL components, although it should be understood that CMOS components may be used where capable of propagating signals at adequate speeds for measuring such high-frequency signals.

Referring to channel **12**, an input signal A_{in} is directed on a signal line **34** to the positive inputs of comparators **22***a* and **22***b*. Preferably, the comparators are high-speed ECL devices such as MC10E1652 comparators from Motorola. Each comparator compares A_{in} to reference voltages VRef1 and VRef2, respectively, so that the output of each comparator changes state as A_{in} moves above and below the reference voltage. The values of VRef1 and VRef2 depend, generally, on the construction of the comparators. For example, ECL signals typically range between −0.8V and −1.8V. VRef1 and VRef2 may therefore be set to the mid-point of this range.

The reference voltages may also, however, vary from each other. For example, comparators **22***a* and **22***b* typically include hysteresis to avoid false triggers. That is, assuming that Vref1 and Vrefz are both equal to 1V, comparators **22***a* and **22***b* might go high when A_{in} rises above 1.25V and low when A_{in} drops below 0.75V. Where VRef1 and VRef2 are respectively set to 0.75V and 1.25V, however, as shown in FIG. **2**, the output of comparator **22***a* goes high when the rising edge of A_{in} rises above 1V and low when the falling edge of A_{in} falls below 0.5V. The output of comparator **22***b* goes high when the rising edge of A_{in} rises above 1.5V and low when the falling edge of A_{in} drops below 1V. Accordingly, comparators **22***a* and **22***b* combine to precisely detect the rising and falling edges of A_{in} at 1V while maintaining their hysteresis protection against false triggers.

As indicated in FIG. **2**, comparators **22***a* and **22***b* output binary signals having rising edges at the rising edges of A_{in}. These binary signals are output to multiplexers **24***a* and **24***b*. As discussed below, each multiplexer in the illustrated preferred embodiment has four inputs. For purposes of the present discussion, however, it is assumed that the multiplexers gate the comparator outputs, in their positive, inverse or differential forms, to interpolators **26***a* and **26***b*.

Arming circuit **28** triggers the interpolators. Once triggered, each interpolator determines the time between receipt of the next rising edge on the signal from its comparator and a known time reference, for example a rising edge of some subsequent clock pulse provided by the time base. As should be understood in this art, the time base may be provided by a quartz crystal oscillator, for example at a period of 20 ns.

The time measurement is based on the charge or discharge rate of a capacitor within the interpolator. Following arming of the interpolator, the next rising edge from the comparator begins the capacitor's charge or discharge. The subsequent clock pulse edge, however, stops the charge or discharge so that the voltage at the capacitor reflects the time between the signal's rising edge and the clock pulse. That is, the capacitor voltage comprises a time signal that corresponds to the occurrence of the signal edge to a predetermined time reference.

The interpolator outputs the time signal to computer **16** and notifies logic circuit **20**, primarily comprised of a field programmable gate array (FPGA), that a measurement has occurred. The FPGA also receives the output of continuous time counter **30** and continuous event counter **32**. The time counter is embodied entirely by the FPGA and is driven by the time base to count time base pulses. Assuming a 20 ns

time base, time counter **30** is a 50 MHz counter. As discussed in more detail below, however, the event counter is comprised of multiple counters, including two parallel ECL 8-bit counters and a 37-bit counter embodied by logic circuit **20**, that are driven by the signal passed from the multiplexer so that the event counter sequentially counts pulses in the multiplexer signal. Although a single time counter and a single event counter are illustrated in FIG. **1**, it should be understood that a counter pair may be provided for each channel **12** and **14**.

At the next time base clock pulse after receiving notification that the interpolator has measured a signal edge, the logic circuit (1) instructs the computer to read the interpolator measurement from the measurement capacitor and (2) reads the time and event counts from counters **30** and **32**. It then downloads the time and event counts to memory **18**, from which computer **16** retrieves the information to assign to the signal measurement. In this manner, the processor circuit correlates the measured signal edge with time and event measurements from the counters. Thus, a "measurement tag" indicates the time the signal edge occurred and the edge's position within the sequence of edges. In a preferred embodiment, the time count is calibrated to a predetermined time reference so that the measurement tag reflects the real time at which the rising signal edge occurred.

The first measurement circuit **22***a*–**26***a*/**20** may be referred to as the "start" measurement circuit, while the second measurement circuit **22***b*–**26***b*/**20** may be referred to as the "stop" measurement circuit. Generally, time interval analyzer **10** measures characteristics of a desired signal by comparing the time and/or event measurements of the start circuit with that of the stop circuit. The particular measurement depends upon the signal selected at multiplexers **24***a* and **24***b* and upon the manner in which arming circuit **28** arms the interpolators. For example, if the start circuit multiplexer passes the A_{in} signal from comparator **22***a* as shown in FIG. **1**, if the stop circuit multiplexer passes the inverse of the A_{in} signal from comparator **22***b*, and if interpolator **22***b* is armed immediately following interpolator **26***a*, but before the expiration of a period equal to the input signal pulse width, the difference between the time portions of the start and stop measurement tags is equal to the pulse width. A more detailed discussion regarding how measurements may be selected is provided below.

The logic circuit outputs to FIFO memory **18** at each clock pulse. Control computer **16** repeatedly reads the memory to perform a desired analysis and/or to display the measured information at a display device **150**, for example a video monitor. The control computer also controls the arming circuit and the multiplexer inputs to effect a desired measurement.

As should be understood in this art, the FPGA of logic circuit **20** is a programmable device having a multitude of transistors that can be selectively connected using synthesizer software such as VHDL. That is, once the FPGA's desired functions are known, they can be entered into the software which, in turn, controls a suitable device to program the FPGA to perform these functions. It should be within the skill of one of ordinary skill in this art to program an FPGA in accordance with the present invention in light of the present discussion, and a particular FPGA configuration is therefore not discussed in detail herein.

The arrangement illustrated in FIG. **1** may also be used to compare characteristics of input signals A_{in} and B_{in}. Because these signals are processed on separate channels, error induced by crosstalk and cross-channel switching circuitry is reduced. A "channel" as referred to herein includes one or more parallel measurement circuits, each of which may be driven by an external signal received from the same input port on the time interval analyzer. However, signals may cross from one channel to another to be used as desired in a given measurement. Preferably, the channels are isolated from each other except for the cross signals, and each channel has its own power supply.

As described above, the interpolator's time period measurement is related to the charge or discharge of a capacitor. FIG. **3** provides a prior art arrangement for effecting a time period measurement using a capacitor. Generally, a capacitor **35** is discharged by a differential transistor pair **36** that is, in turn, controlled by the input signal A_{in} and its inverse A_{in}^{-1} provided on lines **38** and **40**. Prior to a measurement, A_{in} is low, and A_{in}^{-1} is high. Thus, transistor **42** is off, and transistor **44** is on. A constant current source **46** therefore draws current through transistor **44** but not through transistor **42**.

A positive edge of input signal A_{in}, however, reverses the states of transistors **42** and **44**. Constant current source **46** then draws current through transistor **42**, thereby discharging capacitor **34**. At the end of the pulse, lines **38** and **40** and transistors **42** and **44** return to their original states, thereby ending the discharge of capacitor **35**. The decrease in the capacitor's voltage is proportional to the time transistor **42** was activated and, therefore, the period of the signal pulse. A control circuit **47** driven by the signal on line **40** measures the voltage across capacitor **35** at the end of the pulse on lines **38** and **40**. Since the capacitor's original voltage is known, the change in voltage indicates the pulse length.

The circuit must then drive capacitor **35** back to its original voltage level. The input signal, through control circuit **47**, controls a FET **48** that gates a reference voltage V_K to capacitor **35**. Normally, the control circuit activates the FET so that reference voltage V_K is constantly applied to the capacitor, thereby maintaining the capacitor in a charged state. When a pulse is received on lines **38** and **40**, the signal's state change causes control circuit **47** to close the FET. At the end of the pulse, the FET is reopened.

FET **48** introduces error to the interpolator measurement. For example, the switching of the FET must be closely synchronized to the input signal pulse and, even where synchronized, injects an error current into the capacitor discharge. Further, the FET typically exhibits some leakage from reference voltage V_K into the capacitor.

The Interpolator

1. The Trigger Circuit

Referring now to FIGS. **4**A and **4**B (hereafter collectively referred to as FIG. **4**), an interpolator **26** according to one preferred embodiment of the present invention includes a trigger circuit having three flip flops **102**, **104** and **106**. As should be well understood in this art, a flip flop gates its D input to its Q output, and the inverse of the D input to its Q^{-1} output, at each rising edge of its clock input. For example, the D input to flip flop **102** is an output signal **50** received from arming circuit **28** (FIG. **1**). Prior to enabling a measurement, the arming signal **50** is low. Thus, regardless of the flip flop's clock input, the Q and Q^{-1} outputs are low and high, respectively.

As indicated in the figure, the flip flop clock inputs are differential signals. That is, each input is equal to the difference between the clock input signal and the inverse of the clock input signal. As should be understood in this art, this reduces the effect of signal noise, which would be present on both lines, and is a typical signal format for use

with ECL components. Thus, if the input signal is 0, the differential input is −0.8V. If the input signal is 1, the differential input is 0.8V. For ease of explanation, differential inputs indicated in the figures may be referred to in the present description simply as an input signal.

When the arming circuit outputs an enabling signal on line **50** (that is, when the signal on line **50** goes high), the Q and Q^{-1} outputs of flip flop **102** remain low and high, respectively, until the flip flop receives a rising edge at its clock input. The clock input is the differential signal from multiplexer **24***a* (A_{in} and A_{in}^{-1} where the time interval analyzer's input signal A_{in} is selected at the multiplexer). Thus, the flip flop **102**'s Q/Q^{-1} output changes state at the first rising edge of the input signal A_{in} that follows the enabling signal from the arming circuit. This is the signal edge to which the measurement circuit assigns a measurement tag and is hereafter referred to as the "measured edge."

The differential output signal formed by the Q and Q^{-1} outputs of flip flop **102** is directed to arming circuit **28** (FIG. **1**) on lines **52** and **54** to potentially trigger the parallel measurement circuit **22***b*–**26***b*/**20** (FIG. **1**) and to instruct the logic circuit to assign the event portion of the measurement tag, as described in more detail below. The Q/Q^{-1} output is also directed to a differential AND gate **108** that controls the discharge of the interpolator's measurement capacitor.

Furthermore, the differential output from flip flop **102** is directed to a buffer **146** and thereafter to an op amp **148** that amplifies the signal and outputs to an analog-to-digital converter (not shown). Control computer **16** (FIG. **1**) reads the converter and drives display device **150** to display a message indicating that a measurement has occurred.

The Q output of flip flop **102** is directed to the D input of flip flop **104**. Since flip flop **102**'s Q output is low until the measured edge, flip flop **104**'s Q/Q^{-1} output is low/high until the D input receives this edge. In other words, the measured edge enables flip flop **104**. Flip flop **104**'s clock signal is the differential time base clock signal at lines **56** and **58**. Thus, the flip flop's Q and Q^{-1} outputs change state at the rising clock edge that follows the measured edge.

The differential output formed by the Q and Q^{-1} outputs of flip flop **104** is directed to an ECL/TTL converter **110** that outputs a TTL signal corresponding to the flip flop's differential output on line **60** to logic circuit **20** (FIG. **1**). The output of flip flop **104**, as converted to a TTL level on line **60**, enables the logic circuit to assign the time portion of the measurement tag, as discussed below.

The third flip flop **106** receives the Q output from flip flop **104** as its D input. Thus, it is enabled at the occurrence of the first time base clock pulse following the measured edge. Its clock input is also the time base clock signal on lines **56** and **58**. Accordingly, its Q and Q^{-1} outputs change state upon the rising edge of the second clock pulse following the measured edge.

FIG. **5** illustrates the trigger circuit's operation with respect to the arming circuit enabling signal, the selected input signal from multiplexer **24***a*, and the time base clock signal. Prior to a pulse **62** on line **50** from the arming circuit, the Q output of each flip flop **102**, **104** and **106** is low. At the rising edge of pulse **62**, however, flip flop **102** enables. At the rising (measured) edge of the following input signal pulse, indicated at **64**, flip flop **102**'s Q and Q^{-1} outputs change state, enabling flip flop **104** and beginning the discharge of the interpolator's measurement capacitor. At the rising edge of the following time base clock pulse, indicated at **66**, flip flop **104**'s Q and Q^{-1} outputs change state, and flip flop **106** enables. At the rising edge of the next time base clock pulse, indicated at **68**, flip flop **106**'s Q and Q^{-1} outputs change state, completing the capacitor's discharge.

Thus, the interpolator's measurement capacitor discharges during a period A between the rising edge of pulse **64** (the measured edge) and the rising edge of pulse **68**. In general, the interpolator measures the period between the measured edge and some subsequent reference event, such as a time base clock pulse. Thus, the measurement period could be the period B between the measured edge and the rising edge of pulse **66**. Measurement A, however, assures that there will be a measurable voltage difference across the measurement capacitor. For example, if the circuit were configured so that the capacitor discharged only between the rising edges of pulses **64** and **66**, there would be no discharge where the pulses occurred at the same instant. Using the additional flip flop stage to extend the measurement period to the second clock pulse assures that the capacitor will discharge for at least one clock period.

Returning to FIG. **4**, the differential inputs to AND gate **108** are the Q/Q^{-1} output of flip flop **102** and the inverse Q/Q^{-1} output of flip flop **106**. Thus, before flip flop **102** triggers, the AND gate sees a low signal from flip flop **102** and a high signal from flip flop **106**, and the gate's output is therefore low. When flip flop **102** triggers at the measured edge, both inputs to the AND gate are high, and its output therefore goes high. As indicated in FIG. **5** and as discussed below, this begins the measurement capacitor's discharge. When the output from flip flop **106** goes high at the rising edge of the second clock pulse, the inverse input to the AND gate goes low, and the gate's output goes low, thereby ending the capacitor's discharge.

2. The Shunt Circuit

The output from AND gate **108** is a differential signal on lines **70** and **72** that controls a shunt circuit that includes a differential pair **112** having a pair of high-frequency microwave transistors **74** and **76**. Normally, the shunt circuit presents an open circuit to the measurement capacitor at transistor **74** and allows current to pass through transistor **76**. More specifically, when the AND gate output is low, the signal on line **72** is high, and the signal on line **70** is low. Thus, transistor **74** is deactivated, and transistor **76** is activated.

Differential pair **112** feeds to a constant current source established by a stable voltage source and a resistor. The voltage source is comprised of a 2.5 V reference chip (for example a MAX6225 voltage reference available from Maxim Integrated Products, Inc. of Sunnyvale, Calif.) that outputs to an op-amp **116** that, in turn, controls an npn transistor to maintain a stable 2.5V level above a 100 ohm low thermal coefficient resistor **80**. The npn transistor arrangement could be replaced by a FET arrangement, as should be understood by those skilled in this art. The 2.5V level across resister **80** draws a 25 milliamp(ma) current through differential pair **112**. When transistor **76** is on, and transistor **74** is off, current is drawn from a 5V source V_{cc} through transistor **76**.

A diode bridge **118** is disposed upstream from transistor **74**. A 3.75V level is maintained at intermediate pin **2** of bridge **118** on line **82** through op amps **120** and **122**. Line **82** is received from control computer **16** (FIG. **1**), which maintains the 3.75V level by software.

Op amp **120** also maintains a 3.75V level at intermediate pin **3** of a diode bridge **124**. Pin **3** connects through a diode **84** and output pin **1** to a 1 ma current sink formed by 2.5V source **114**, an op amp **126** and an npn transistor **86** that maintains a 2.5 V level above a 2.49 kohm low thermal coefficient resistor **128**.

A 1 ma current is applied to input pin **4** of bridge **124** by a constant current source comprised of a 2.5 V reference **130**

(for example a MAX6125 voltage reference available from Maxim Integrated Products) driven by a floating reference V_f, an op amp **88**, a 2.49 kohm low thermal coefficient resister **132** and a 0.01 microF capacitor **90**.

The 1 ma current into input pin **4**. of bridge **124** may pass through either or both of diodes **92** and **94**, depending on the voltage levels at intermediate pins **2** and **3**. As described above, pin **3** is held at 3.75 V. If the voltage across a 560 picoF capacitor **96** (the interpolator's measurement capacitor) is less than 3.75V, the 1 ma current passes through diode **94** and charges the capacitor. When the voltage across the capacitor reaches 3.75 V, however, pins **2** and **3** of diode bridge **124** are balanced, and the current splits between diodes **92** and **94**, and between diodes **84** and **98**, to the 1 ma current sink at output pin **1**. That is, when the voltage level at pin **2** is less than the level at pin **3**, capacitor **96** charges through diode **94** from the 1 ma current source established by reference **130** while the current sink established by reference **114** draws through diode **84** from the 3.75V source. When capacitor **96** fully charges to 3.75V, pins **2** and **3** balance, and the entire 1 ma current from the reference **130** source passes evenly through the two halves of bridge **124** to the current sink. Should capacitor **96** leak, the voltage at pin **2** of bridge **124** drops slightly, and current is drawn through diode **94** from the 1 ma source driven by reference **130** to recharge the capacitor to the 3.75V level.

Thus, while the output of AND gate **108** remains low, bridge **124** and the current source driven by voltage source **130** maintain measurement capacitor **96** at 3.75V. When the AND gate output goes high, however, the level on lines **70** and **72** change state, activating transistor **74** and deactivating transistor **76**. The 25 ma current sink driven by voltage reference **114** and resistor **80** then draws 25 ma through transistor **74**, allowing capacitor **96** to discharge through transistor **74**. As the capacitor discharges, the voltage level at pin **2** of diode bridge **124** drops, causing current from the 1 ma source driven by voltage reference **130** to pass through diode **94** and transistor **74** to the 25 ma sink. Thus, the current sink draws 24 ma from capacitor **96**.

Capacitor **96** continues to discharge until the output of AND gate **108** returns low. This causes transistor **74** to turn off, thereby blocking the capacitor's discharge path. Thus, the shunt circuit changes from a non-conducting state between the constant current source and the current sink to a conducting state, and vise-versa, responsively to the trigger circuit to define a discharge period for measurement capacitor **96**.

It should be understood, however, that the circuitry could be configured to normally maintain capacitor **96** in a discharged state, wherein the trigger circuit controls the shunt circuit to charge the capacitor during the measurement period so that the charge increase across the capacitor corresponds to the measurement period. In such a configuration, npn transistors **74** and **76** are replaced by pnp transistors, and the transistor pair is disposed between a 1 ma constant current sink and a 25 ma current source. The measurement capacitor is connected to the constant current sink so that the transistor pair and the capacitor form parallel inputs to the constant current sink. Normally, the transistor between the 25 ma source and the 1 ma constant sink is off, and the capacitor discharges to the sink. The 25 ma current flows through the second transistor to a resistor or other suitable circuitry. Upon receiving the trigger signal at a triggering level, however, the first transistor activates, directing 1 ma to the constant sink and 24 ma to the capacitor. When the transistor pair switches back to its original state at the measurement's end, the increased voltage across the capacitor corresponds to the measurement period.

Accordingly, in either of the discharge embodiment (FIG. **4**) or the charge embodiment described above, there is a first current circuit that is either a constant current source or a constant current sink. The transistor pair and the measurement capacitor are disposed in parallel with respect to the first current circuit. A second current circuit is (1) a current sink where the first current circuit is a constant current source or (2) a current source where the second current circuit is a constant current sink.

3. The Edge Measurement

As indicated in the discussion above with respect to FIG. **5**, capacitor **96** discharges for a period of from one to two time base clock periods. Following the rising edge of the time base clock pulse that returns AND gate **108** to its low output (pulse **68** in FIG. **5**), control computer **16** (FIG. **1**) reads the voltage level on capacitor **96** from a fourteen-bit analog-to-digital converter (not shown) from a line **100**. A 400 MHz FET input op amp **134** (for example an OPA655 available from Burr-Brown Corporation of Tucson, Ariz.) amplifies and outputs the capacitor's voltage to the analog-to-digital converter over line **100**.

The logic circuit downloads the time and event portions of the measurement tag to the computer so that the occurrence of the rising edge of pulse **64** is measured with respect to a known time reference and is identified in numerical position. As discussed above, and referring also to FIGS. **1** and **5**, the output of ECL/TTL converter **110** notifies logic circuit **20** at the rising edge of clock pulse **66**, when the output of flip flop **104** changes state, that a measurement is occurring. The logic circuit then reads the time counter and downloads the time count and the event count to FIFO memory **18**. The propagation delay in making the counter reading is approximately three clock pulses. That is, the actual time counter reading corresponds to the third clock pulse following pulse **66**. However, this delay is consistent and also appears in measurements made by the stop measurement circuit. Thus, where real time measurements are desired, the continuous time counter may be calibrated to account for the delay. Where the device is used to measure the period between start and stop measurements, the delay is subtracted out.

Control Computer **16** repeatedly reads memory **18**. Upon receiving the time tag information, the computer knows a measurement has occurred and therefore reads the voltage across capacitor **96** through the analog-to-digital converter (not shown) and op amp **134**. Accordingly, the computer knows (1) the period between the rising edges of pulses **64** and **68**, as represented by the voltage change across capacitor **96**, (2) the time of the rising edge of pulse **68**, through the time counter read, and (3) the numerical position of pulse **64**, for example within a series of signal pulses, through the event counter read. The computer therefore knows the time and position at which the rising (measured) edge of pulse **64** occurred. It should be understood that there may be a variety of forms in which this information may be represented within or presented by the computer. The particular form may depend upon the measurement being performed and the programming arrangement of computer **16**.

Furthermore, as those skilled in this art should understand, a certain period of time is required for the circuit components to settle before the computer may accurately measure the capacitor's voltage level. This period may be generally determined from the circuit part specifications. In one preferred embodiment including an interpolator as in FIG. **4**, control computer **16** measures the voltage at capacitor **96** approximately 10 clock pulses following pulse **68**. Fifteen additional clock pulses are required before the next measurement to allow the capacitor to recharge, and the

computer therefore does not rearm an interpolator until at least 300 ns has elapsed. Prior to the next measurement, the logic circuit clears the trigger circuit flip flops **102**, **104** and **106** with a signal over line **216** (FIG. **4**).

4. The Boost Circuit

Following the measurement, the 1 ma constant current source driven by voltage reference **130** charges capacitor **96** up to 3.75V at an approximately linear rate without the asymptotic slope that would occur if the capacitor were charged by a voltage source. Were there no other charge source, the constant current source shown in FIG. **4** would charge the capacitor in approximately 600 ns. To reduce the charge time to approximately 100 ns, logic circuit **20** (FIG. **1**) provides a current boost through a NAND gate **136** and bridge circuit **118**.

In general, the NAND gate provides a rising voltage transition between the current source and the measurement capacitor so that the capacitor charges with the transition. The inputs to NAND gate **136** on line **138** are normally high so that the gate's output on line **140** is normally low. After a time delay following the computer's measurement of capacitor **96** through the analog-to-digital computer sufficient to assure that the measurement is complete, the logic circuit drives the signal on line **138** low, thereby causing line **140** to go high. As should be understood in this art, the transition of the signal on line **40** from low to high is not instantaneous. As it begins to rise, the voltage level at input pin **4** of bridge **118** is lower than the 3.75V level on intermediate pin **2**. Thus, diode **142** is reverse biased, and current flows through diode **144** and output pin **3** to charge capacitor **96**. The voltage across capacitor **96** rises with the voltage on line **140** until the voltage at input pin **4** reaches 3.75V. At this point, diode **142** begins to forward bias. Since current cannot flow into the voltage source from pin **2**, however, pin **4** is held at 3.75 V. Capacitor **96**, which slightly lags the voltage on line **140**, continues to charge from the 1 ma current source. When it reaches 3.75V, pins **2**, **3** and **4** of bridge **118**, and pins **2** and **3** of bridge **124**, are balanced, and the charge is complete.

A full four-diode bridge is used at **118** for convenience of construction and because the diodes in a pre-packaged bridge circuit are matched, thereby providing a relatively precise balance at the intermediate nodes. It should be understood, however, that a half bridge having two discrete diodes **142** and **144** may be used in place of the full bridge.

Furthermore, where the interpolator is configured in the charge embodiment discussed above, the boost signal is inverted so that a falling edge is applied between the first current circuit and the capacitor.

The Continuous Time Counter

Presently, it is difficult or impossible to read a discrete hardware counter operating at a high speed (greater than about 100 MHz for TTL and 500 MHz for ECL) because the counter's output never stabilizes. Even if the output were to stabilize, however, the time necessary to read the counter is greater than the time in which the counter changes state. Thus, there could be no confidence in the counter reading. As discussed above, however, continuous time counter **30** is embodied within the logic circuit's FPGA, which can read the clock up to frequencies within a general range that includes 50 MHz. As should be understood in this art, the FPGA accurately reads its internal clock to determine the time portion of the measurement tag.

The Continuous Event Counter

Because event counter **32** counts ECL input signal pulses, and because the event counter may increment at a frequency greater than 50 MHz, the event counter includes a discrete hardware counter stage upstream from the FPGA. Referring to FIG. **6**, the hardware counter stage includes two parallel eight-bit ECL-logic counters **202** and **204**, each of which is enabled by a flip flop **206**. Specifically, the flip flop's Q^{-1} output enables counter **202**, while the Q output enables counter **204**. Thus, the flip flop controls the counters so that only one is enabled at any time. Furthermore, the flip flop's Q^{-1} output is fed back to its D input so that the flip flop output changes state at the rising edge of each pulse in its clock input. Referring also to FIG. **4**, the flip flop's clock input is the Q/Q^{-1} output from flip flop **102**. Since flip flop **102** changes state at every measured edge, event counter **32** transitions between hardware counters **202** and **204** at every measured edge. Since each counter counts the rising edges of pulses on the signal that includes the rising edge (the differential signal on lines **208**/**210** from multiplexer **22***a* (FIG. **1**)), the count on the counter **202** or **204** that is stopped upon detection of the measured edge corresponds to the measured edge's position in the sequence of rising edges in the input signal.

The overflow bit from each counter **202** and **204** triggers a 37-bit counter **212** in the FPGA. That is, whenever the count of either counter **202** or **204** reaches **255**, the next count increments FPGA counter **212**.

In operation, assume that counter **202** is actively counting input signal pulses from lines **208**/**210**. When flip flop **102** is enabled, the next input signal pulse triggers flip flop **102** which, in turn and in less than the period of one input signal pulse, triggers flip flop **206**. This stops counter **202** and begins counter **204** so that while counter **202** reflects the count at the measured edge, counter **204** continues to count subsequent pulses. Logic circuit **20** stores the count at each stopped counter for use in a later measurement.

The ECL components **202**, **204** and **206** permit a transition that is fast enough so that counter **202** or **204** counts the next pulse following the last pulse counted by the other counter **202** or **204**. The counter arrangement illustrated in FIG. **6** can accurately count pulses on an input signal up to a frequency of approximately 1.5 GHz.

The total event count (i.e. the event read) corresponding to the measured edge is equal to the count on the stopped counter **202** or **204**, plus the count from the other counter **202** or **204** when it was last stopped, plus the count of FPGA counter **212** at the time flip flops **102** and **206** trigger. The Q output of flip flop **206** is received by logic circuit **20**, which is configured to sum these numbers at each transition of the flip flop **206**'s Q output. The resulting sum is the event portion of the measurement tag described above.

In a preferred embodiment, an event counter as shown in FIG. **6** is provided for each of the start and stop measurement circuits in each of channels **12** and **14**. Similarly, the logic circuit may embody a separate continuous time counter for each measurement circuit.

The Input Signal Multiplexers

Referring to FIGS. **1** and **7**, control computer **16** controls multiplexers **24***a* and **24***b* to gate any of four inputs to their respective interpolators. The four selectable inputs to multiplexer **24***a* are the channel **12** input signal A_{in}, the input signal inverse A_{in}^{-1}, the input signal B_{in} to channel **14** and a calibration signal. The inputs to multiplexer **24***b* are A_{in}, the inverse A_{in}^{-1} the inverse B_{in}^{-1} and the calibration signal.

The Arming Circuit

Referring now to FIG. **8**, arming circuit **28** includes a pair of flip flops **156***a* and **156***b* that respectively arm interpola-

tors **26***a* and **26***b*. The D input for each flip flop is an output from control computer **16** that is directed to the flip flop through a TTL-to-ECL converter (not shown). The Q output of each flip flop feeds to the D input of first stage flip flops **102** (see also FIG. **4**) in interpolators **26***a* and **26***b*. Thus, once computer **16** arms flip flop **156***a* or **156***b* with a high signal at its D input, the next rising edge received at the flip flop's clock input gates the high signal to the flip flop's Q output to thereafter enable the interpolator flip flop **102**. This begins the interpolator measurement. That is, once the computer enables the arming circuit flip flop, the flip flop clock input arms the measurement circuit to begin the measurement.

The clock inputs are provided by respective multiplexers **158***a* and **158***b*, allowing the user in the embodiment illustrated in FIG. **8** to select one of six possible inputs from which to arm each measurement circuit. The selection of the arming signal at multiplexers **158***a* and **158***b*, and the selection of the measurement circuit input signal at multiplexers **24***a* and **24***b* (FIGS. **1** and **7**), determine the measurement performed at channel **12** (FIG. **1**). Referring also to FIG. **9**, for example, assume that the user selects, through user input switch **164** and computer **16**, the time interval analyzer's channel **12** input signal A_{in} at multiplexers **24***a* and **158***a* and that computer **16** has enabled flip flop **156***a* at **168**. The rising edge of the next input signal pulse **170** triggers flip flop **156***a*, thereby enabling flip flop **102**. Since A_{in} is also selected at multiplexer **24***a*, the A_{in} signal is directed to the clock input of flip flop **102**. Due to the propagation delay through multiplexer **158***a* and flip flop **156***a*, however, flip flop **102** triggers at the rising edge of the next input signal pulse, **64**. This edge is, therefore, the measured edge as described above.

Had A_{in}^{-1} been selected at multiplexer **24***a*, the start measure circuit would have measured the falling edge of pulse **170**.

A user might select B_{in} at multiplexer **158***a* and A_{in} at multiplexer **24***a* to measure the A_{in} signal based on an event in the B_{in} signal. For example, if A_{in} describes events that occur during a shaft's rotation, and if B_{in} is a signal corresponding to the count of shaft rotations, this arrangement could be used to measure an A_{in} event at each shaft rotation. Furthermore, the user may arm a measurement by an external signal directed to the time interval analyzer through an appropriate port.

The logic circuit may also be used to provide an arming signal through the "FPGA" input to the multiplexers. This input can be used to provide a variety of pre-programmed and/or adjustable arming signals. For example, the FPGA is driven by the time base clock and in a preferred embodiment is programmed to divide down the clock by a factor N selected by the user through switch **164** and computer **16** to produce a signal at the FPGA input to the multiplexers that has a pulse at every Nth time base clock pulse. Thus, the signal selected at multiplexer **24***a* is measured every N time base clock pulses.

Furthermore, a divide-by-N counter **214** is driven by the output signal from start measurement circuit multiplexer **24***a*. Thus, the start and/or stop measure circuits can be armed by the start measurement circuit's input signal, divided by a desired factor. For example, assuming that counter **214** is an eight-bit counter and that it is desired to measure the start measurement circuit's input signal at every 100th pulse, computer **16** initially loads counter **214** to **156**. When the counter reaches **255**, the next count rolls the counter back to **156** and outputs a pulse to multiplexer **158***a*. A divide-by-N counter may be provided for each of the start and stop measurement circuits.

The time interval analyzer may be configured to measure subsequent pulse edges, whether for pulse width, single period or other desired measurement, by deactivating the D input to flip flop **156***b* and enabling the stop measurement trigger circuit with an output from the start measurement trigger circuit. For example, to measure pulse width, computer **16** selects the A_{in} input at multiplexers **158***a* and **24***a* and deactivates flip flop **156***b*. Referring again to FIG. **9**, upon enabling flip flop **156***a*, but not flip flop **156***b*, at **168**, flip flop **102** of the start measurement circuit interpolator **26***a* is enabled at the rising edge of pulse **170**. Thus, the interpolator measures the rising edge of the next pulse **64**. At pulse **64**'s rising edge, the Q/Q^{-1} output of flip flop **102** in the start measurement interpolator changes state, and this output is directed to the input of an OR gate **216**. This causes the OR gate output to go high, thereby enabling flip flop **102** of stop measurement interpolator **26***b*. Since the computer has selected the A_{in}^{-1} input to the stop measurement multiplexer **24***b*, the stop measurement interpolator's flip flop **102** changes state at the next falling edge it receives, which in this case is the falling edge of pulse **64**. As described above, the logic circuit outputs, through FIFO memory **18**, a measurement tag to the computer that corresponds to each measured edge. The difference in the time portions of these tags is equal to the time interval over the width of pulse **64**. Computer **16** determines this difference and outputs an appropriate signal to the display device to notify the user.

Accordingly, the time interval analyzer can measure the time interval between events on an input signal by comparing the time portion of the measurement tags of these events as measured by the start and stop measurement circuits. Additional measurement circuits, similar to and in parallel with the start and stop measurement circuits, can be added to enable time interval measurements among several signal events within a relatively short period of time. The selection of a given measurement is determined by the selections of the input signals and arming signals to each measurement circuit, and it should be understood that the measurement circuits and the arming circuits can be configured in any suitable arrangement with any suitable input signal(s) to achieve a desired time interval measurement. Thus, it should be understood that such configurations and combinations fall within the scope and spirit of the present invention.

For instance, assume that it is desired to measure the time interval between the rising edges of first and fifth pulses on an input signal A_{in}. Control computer **16** may select A_{in} at multiplexers **24***a* and **158***a*. At the same time, the computer loads counter **214** to **251** and selects the counter output as the input to multiplexer **158***b*. Thus, the stop measurement circuit arms five pulses after the start measurement circuit and, therefore, measures the rising edge of the fifth pulse following the start measurement circuit's measured pulse.

Furthermore, a time interval analyzer according to the present invention may be used to measure jitter in an input signal. Referring to FIG. **11**, cycle-to-cycle jitter may be measured by comparing the periods of subsequent signal cycles, for example the period indicated at X to the period indicated at Y. Referring also the FIG. **1**, this measurement may be effected by selecting the A_{in} input to multiplexers **24***a* and **24***b*, selecting the A_{in} input the multiplexer **158***a* (FIG. **8**) and deactivating multiplexer **156***b* (FIG. **8**). Channel **14** has the same configuration and is armed to measure the period immediately following the period measured by channel **12**. Thus, control computer **16**, which may be embodied by the same computer for both channels **12** and **14**, measures the periods of cycles X and Y.

More specifically, the output of flip flop **102** on lines **52** and **54** (FIG. **4**) is directed to the arming circuit multiplexer **158***a* (FIG. **8**) for the start measurement circuit of channel **14** so that the signal arms channel **14**'s start measurement circuit. Thus, the channel **14** start measurement circuit measures the first rising edge following the rising edge of pulse **230**, i.e. the rising edge of pulse **232**. The channel **14** stop measurement circuit is armed as described above to measure the falling edge of pulse **232** to define the pulse width. The comparison of the pulse width measurements made by channels **12** and **14** indicates jitter present on signal A_{in}.

To measure duty cycle, channel **12** is configured to measure period X, and channel **14** is configured to measure pulse width W. The signal's duty cycle, therefore, is equal to W/X. In an alternate configuration, channel **12** includes three parallel measurement circuits so that the single channel can measure three subsequent edges (the rising and falling edges of pulse **230** and the rising edge of pulse **232**) to thereby measure duty cycle. To measure pulse-width-to-pulse-width jitter, channel **12** measures the pulse width of pulse **230**, and channel **14** measures the width of pulse **232**. Comparison of these measurements indicates jitter from one pulse to another. It should be understood that various measurements may be made to detect jitter error.

To measure the slope of a rising signal edge, the A_{in} input is selected at each of the multiplexers **24***a* and **24***b*, and VRef2 is offset from VRef1 so that the start measurement circuit measures the time at which a rising edge of a pulse on the input signal reaches a first voltage level and so that the stop measurement circuit measures the time at which the edge reaches a second, higher, level. The voltage level difference divided by the time difference is the edge slope.

Computer **16** may store predetermined measurement configurations such as pulse width, single period width and duty cycle, that may be selected by the user through switch **164**. Switch **164** may comprise any suitable mechanism such as a button or a software option. For example, predefined measurement options may be presented to the user as selectable icons on the display device.

Real Time Measurements

The time interval analyzer may be calibrated so that the time portion of the measurement tag to a measured event corresponds to real time. Referring to FIG. **10**, the time interval analyzer includes two inputs received from a global positioning system (GPS) **216** and directed to logic circuit **20** and computer **16**, respectively. The construction and operation of global positioning systems does not, in and of itself, form a part of the present invention and is therefore not discussed herein. As should be understood, however, GPS systems typically output both a 1 Hz binary signal and a serial signal that identifies the time at the rising edges of pulses in the binary signal. The time interval analyzer inputs are configured so that the serial input is directed to computer **16** and the 1 Hz signal is directed to logic circuit **20**.

Computer **16** reads the exact time from the serial input and thereby knows the time at the next pulse on the 1 Hz signal. Thus, before the next pulse arrives, computer **16** instructs logic circuit **20** to load continuous time counter **30** (FIG. **1**) to a predetermined count, for example a count equal to the number of pulses of a 50 MHz signal beginning at Jan. 1, 1970 and ending at the next GPS pulse. The computer also instructs logic circuit **20** to start the continuous time counter at the arrival of the GPS pulse. Thus, the continuous time counter is calibrated to real time.

There is, generally, some error in the real time calibration. For example, GPS pulses typically exhibit an approximately 20 ns jitter. Furthermore, the time counter is driven by the time base clock. Since the occurrence of the time base pulse may not exactly coincide with the GPS pulse, an error up to one period of the time base clock may also be introduced. Such error, however, is acceptable for real time measurement of signal events.

Furthermore, it should be understood that the real time calibration can be configured to account for delays in the measurement circuitry. For example, the three-pulse delay in assigning the time portion of the measurement tag described above may be accommodated by delaying the start of the continuous time counter until three time base clock pulses following receipt of the GPS pulse or by programming the logic circuit or computer to account for the difference.

While one or more preferred embodiments of the invention have been described above, it should be understood that any and all equivalent realizations of the presented invention are included within the scope and spirit thereof. The embodiments depicted are present by way of example only and are not intended as limitations on the present invention. Thus, it should be understood by those of ordinary skill in the art that the present invention is not limited to these embodiments since modifications can be made. Therefore, it is contemplated that any and all such embodiments are included in the present invention as may fall within the literal or equivalent scope of the appended claims.

What is claimed is:

1. A time interval analyzer for measuring time intervals between signal events, said analyzer comprising:

a signal channel that receives an input signal;

a plurality of measurement circuits defined within said signal channel in parallel with each other, each said measurement circuit being configured to receive said input signal, measure an occurrence of a first event of said input signal with respect to a predetermined time reference and output a time signal corresponding to the measurement of said occurrence; and

a processor circuit in communication with said signal channel, wherein said processor circuit is configured to receive and compare said time signals from said measurement circuits to each other to determine a time interval between said first event measured by a first said measurement circuit and an event measured by a second said measurement circuit.

2. The analyzer as in claim **1**, wherein each said measurement circuit includes a comparator that receives said input signal and a reference signal, compares said input signal to said reference signal and outputs a binary signal responsively to said comparison.

3. The analyzer as in claim **2**, wherein each said measurement circuit includes a multiplexer downstream from said comparator, wherein said multiplexer receives said binary signal and at least one other input signal and wherein said processor circuit controls said multiplexer so that said multiplexer gates one of said binary signal and said at least one other signal to an output of said multiplexer.

4. The analyzer as in claim **3**, wherein one of said at least one other signals is an inverse of said binary signal.

5. The analyzer as in claim **1**, wherein each said measurement circuit includes an interpolator circuit, wherein said interpolator circuit is configured to measure a time period between said first event and a reference event of a time base signal and to output said time signal corresponding to said time period.

6. The analyzer as in claim 5, wherein said interpolator changes a voltage across a capacitor during said time period so that said voltage change corresponds to said time period and wherein said time signal is based on the voltage level across said capacitor following said time period.

7. The analyzer as in claim 1, including a plurality of said signal channels.

8. A time interval analyzer for measuring time intervals between signal events, said analyzer comprising:

a signal channel that receives an input signal;

a plurality of measurement circuits defined within said signal channel in parallel with each other, each said measurement circuit including

a comparator that receives said input signal and a reference signal, compares said input signal to said reference signal and outputs a binary signal responsively to said comparison, and

an interpolator circuit, wherein said interpolator circuit is configured to measure a time period between a first event in said binary signal and a reference event of a time base signal and to output a time signal corresponding to said time period; and

a processor circuit in communication with said signal channel, wherein said processor circuit is configured to receive and compare said time signals from said measurement circuits to each other to determine a time interval between said first event measured by a first said measurement circuit and an event measured by a second said measurement circuit.

9. The analyzer as in claim 8, including a plurality of said signal channels.

10. The analyzer as in claim 8, wherein each said interpolator includes

a trigger circuit that receives said binary signal and that outputs a trigger signal at a triggering level upon occurrence of said first event and at a non-triggering level upon occurrence of a reference event that follows said first event,

a first current circuit having a current source or a current sink,

a second current circuit having

a current sink where said first current circuit has a current source, or

a current source where said first current circuit has a current sink,

a capacitor,

a shunt,

wherein said shunt and said capacitor are operatively disposed in parallel with respect to said first current circuit,

wherein said shunt is disposed between said first current circuit and said second current circuit, and

wherein said shunt receives said trigger signal and is selectable between conducting and non-conducting states between said first current circuit and said second current circuit depending upon said trigger signal so that

said shunt is driven to said conducting state from said non-conducting state upon receiving said trigger signal at said triggering level and

said shunt is driven to said non-conducting state from said conducting state upon receiving said trigger signal at said non-triggering level.

11. A time interval analyzer for measuring time intervals between signal events, said analyzer comprising:

a signal channel that receives an input signal;

a plurality of measurement circuits defined within said signal channel in parallel with each other, each said measurement circuit including

a comparator that receives said input signal and a reference signal, compares said input signal to said reference signal and outputs a binary signal responsively to said comparison,

a multiplexer downstream from said comparator that receives said binary signal and at least one other signal so that said multiplexer gates one of said binary signal and said at least one other signal to an output of said multiplexer, and

an interpolator circuit that receives said multiplexer output, wherein said interpolator circuit is configured to measure a time period between a first event of said multiplexer output and a reference event of a time base signal and to output a time signal corresponding to said time period; and

a processor circuit in communication with said signal channel, wherein said processor circuit is configured to receive and compare said time signals from said measurement circuits to each other to determine a time interval between said first event measured by a first said measurement circuit and said first event measured by a second said measurement circuit.

12. The analyzer as in claim 11, wherein each said interpolator includes

a trigger circuit that receives said binary signal and that outputs an event trigger signal at a triggering level upon occurrence of said first event and at a non-triggering level upon occurrence of said reference event,

a first current circuit having a current source or a current sink,

a second current circuit having

a current sink where said first current circuit has a current source, or

a current source where said first current circuit has a current sink,

a capacitor,

a shunt,

wherein said shunt and said capacitor are operatively disposed in parallel with respect to said first current circuit,

wherein said shunt is disposed between said first current circuit and said second current circuit, and

wherein said shunt receives said event trigger signal and is selectable between conducting and non-conducting states between said first current circuit and said second current circuit depending upon said event trigger signal so that

said shunt is driven to said conducting state from said non-conducting state upon receiving said event trigger signal at said triggering level and

said shunt is driven to said non-conducting state from said conducting state upon receiving said event trigger signal at said non-triggering level.

13. The analyzer as in claim 12, wherein said first current circuit has a constant current source and said second current circuit has a current sink.

14. The analyzer as in claim 12, wherein said first current circuit has a constant current sink and said second current circuit has a current source.

15. The analyzer as in claim 12, wherein each said measurement circuit includes a current boost circuit in

communication with said capacitor, said current boost circuit configured to apply a voltage transition between said first current circuit and said capacitor upon occurrence of said reference event so that said capacitor voltage changes with said voltage transition.

16. The analyzer as in claim **12**, including a time counter that receives said time base signal and that increments a time count at each period of said time base signal,

wherein said trigger circuit outputs a time trigger signal at a triggering level upon occurrence of said first event,

wherein said processor circuit is in communication with said trigger circuit and said time counter so that said processor circuit receives said time trigger signal and reads said time count from said time counter, and

wherein said processor circuit is configured to read said time count upon receiving said time trigger signal at said first triggering level so that said time count read by said processor circuit indicates the time at which said first input signal event occurred.

17. The analyzer as in claim **16**, including an event counter that receives said output signal from said multiplexer and that increments an event count at each occurrence of a said event thereof, wherein said processor circuit is configured to read said event count upon receiving said time trigger signal at said first triggering level so that said event count read by said processor circuit indicates the position of said first event within a sequence of said events.

18. The analyzer as in claim **17**, wherein said event counter includes

a first counter that receives said output signal from said multiplexer and that, when said first counter is activated, increments a first count at each occurrence of a said event of said output signal,

a second counter that receives said output signal from said multiplexer and that, when said second counter is activated, increments a second count at each said occurrence of a said event of said output signal, and

a control circuit that receives said event trigger signal from said trigger circuit and that outputs a control signal to each of said first counter and said second counter that controls activation of said first counter and said second counter so that only one of said first counter and said second counter is activated at a time,

wherein said control circuit is configured so that, when said event trigger signal goes to said triggering level from a non-triggering level and when one of said first counter and said second counter is activated and the other of said first counter and said second counter is deactivated, said control circuit deactivates said one of said first counter and said second counter and activates said other of said first counter and said second counter.

19. The analyzer as in claim **13**,

wherein each said measurement circuit includes a current boost circuit in communication with said capacitor, said current boost circuit configured to apply a voltage transition between said first current circuit and said capacitor upon occurrence of said reference event so that said capacitor voltage changes with said voltage transition,

wherein said analyzer includes a time counter that receives said time base signal and that increments a time count at each period of said time base signal,

wherein said trigger circuit outputs a time trigger signal at a triggering level upon occurrence of said first event,

wherein said processor circuit is in communication with said trigger circuit and said time counter so that said processor circuit receives said time trigger signal and reads said time count from said time counter,

wherein said processor circuit is configured to read said time count upon receiving said time trigger signal at said first triggering level so that said time count read by said processor circuit indicates the time at which said first input signal event occurred,

wherein said analyzer includes an event counter that receives said output signal from said multiplexer and that increments an event count at each occurrence of a said event thereof, and

wherein said processor circuit is configured to read said event count upon receiving said time trigger signal at said first triggering level so that said event count read by said processor circuit indicates the position of said first event within a sequence of said events.

20. A time interval analyzer for measuring time intervals between signal events, said analyzer comprising:

a signal channel that receives an input signal;

a plurality of measurement circuits defined within said signal channel in parallel with each other, each said measurement circuit including

a multiplexer that receives said input signal and at least one other signal so that said multiplexer gates one of said input signal and said at least one other signal to an output of said multiplexer, and

an interpolator circuit that receives said multiplexer output, wherein said interpolator circuit is configured to measure a time period between a first event of said multiplexer output and a reference event and to output a time signal corresponding to said time period; and

a processor circuit in communication with said signal channel, wherein said processor circuit is configured to receive and compare said time signals from said measurement circuits to each other to determine a time interval between said first event measured by a first said measurement circuit and said first event measured by a second said measurement circuit.

* * * * *